Applied Acoustics 115 (2017) 196–208

Contents lists available at ScienceDirect

Applied Acoustics

journal homepage: www.elsevier.com/locate/apacoust

Design and analysis of a BLPC vocoder-based adaptive feedback cancellation with probe noise

Ankita Anand [a], Asutosh Kar [b,*], M.N.S. Swamy [c]

[a] Student Member, IEEE, Delhi, India
[b] Department of Electronic Systems, Aalborg University, Denmark
[c] Department of Electrical and Computer Engineering, Concordia University, Montreal, Canada

ARTICLE INFO

Article history:
Received 7 March 2016
Received in revised form 10 August 2016
Accepted 22 August 2016
Available online 14 September 2016

Keywords:
Adaptive filters
Feedback cancellation
Probe noise
Hearing-aid
Band-limited LPC vocoder
Misalignment

ABSTRACT

The band-limited linear predictive coding (BLPC) vocoder-based adaptive feedback cancellation (AFC) removes the high-frequency bias, while the low frequency bias persists between the desired input signal and the loudspeaker signal in the estimate of the feedback path. In this paper, we present a BLPC vocoder-based adaptive feedback canceller with probe noise with an objective of reducing the low-frequency bias in digital hearing-aids. A step-wise mathematical analysis of the proposed feedback canceller is presented employing the recursive least square and normalized least mean square adaptive algorithms. It is observed that the optimal solution of the feedback path is unbiased for an unshaped probe noise, but is biased for a shaped probe signal; the bias term does not consist of correlation between the desired input and the loudspeaker output. The identifiability conditions are analysed and it is shown that a delay, greater than or equal to the length of the adaptive filter, must be introduced in the forward path to achieve an unbiased feedback path estimate. Algorithm analysis and computer simulations presented in this paper justify the reason for selecting the proposed design over the existing BLPC vocoder-based feedback cancellation algorithm.

© 2016 Elsevier Ltd. All rights reserved.

1. Introduction

Hearing-aids are electro-acoustic assistive listening devices designed to amplify incoming acoustic signals to compensate for the hearing deficiency in the users. An ill-fitted or a vented hearing aid facilitates acoustic leakage [1]. Consequently, system microphone picks up a part of the output acoustic signal, resulting in the formation of a feedback path from the loudspeaker to the microphone. Acoustic feedback degrades the performance of the audio-reinforcement system and is the prime cause of feedback oscillations in hearing-aids. Inefficient attenuation of the feedback compared to the amplification provided by the assistive listening device leads to system instability, resulting in howling and feedback whistling while limiting the maximum achievable gain [2–4]. To achieve speech intelligibility and target insertion gain for the user, feedback suppression is of paramount importance in hearing-aids. A widely employed method of feedback suppression is adaptive feedback cancellation (AFC) [5]. Adaptive filters are used due to their ability to identify and track changes in the acoustic environment which has a major influence upon the feedback path transfer function [3,6]. Owing to the presence of the closed loop, existence of correlation between the original acoustic signal and the loudspeaker signal leads to biased estimate of the feedback path [7–9]. Achieving a perfect match between the feedback path and its estimate is essential for the system to remain stable at any amount of signal amplification. However, a biased estimate is one of the prime reasons for the occurrence of a modelling error in practice [10].

Several feed-forward suppression and feedback cancellation-based decorrelation techniques have been proposed to deal with the bias problem [5,7,11]. Decorrelation by delay insertion can be performed either in the forward signal processing path or in the filter estimation part [8]. It aids in partly bypassing strong signal correlations at lower time lags. But it is not widely practiced as relatively short time delays are allowed in real-time applications [10–12]. Phase modulation [13] and frequency shifting [14] are feed-forward suppression based phase modification techniques [15,16] which move the feedback sound to a different frequency, thereby breaking the acoustic loop to aid decorrelation. They also tend to smooth the open-loop magnitude function leading to a smaller maximum value, and lack the ability to preserve harmonic structures in voiced speech and other audio signals thereby

* Corresponding author.
E-mail addresses: saiankitaanand@gmail.com (A. Anand), asuka@es.aau.dk (A. Kar), swamy@ece.concordia.ca (M.N.S. Swamy).

http://dx.doi.org/10.1016/j.apacoust.2016.08.023
0003-682X/© 2016 Elsevier Ltd. All rights reserved.

degrading the loudspeaker signal [12,17]. Pre-whitening approaches are based on prediction error method, and these techniques generate white signals for adaptive filter estimation, assuming that the incoming sound signal can be modelled as a white noise signal processed by an all-pole filter [18]. However, apart from speech signals that are unvoiced, not all acoustic signals can be assumed to be auto-regressive [18]. In probe noise approach, an unbiased feedback path estimate can be obtained on the basis of a probe signal, which is normally assumed to be uncorrelated with the desired signal. The estimate comprises of a biased and an unbiased part if a mixture of loudspeaker signal and probe signal is used [19]. Probe noise approach can be used in closed loop identification or to derive an adaptive estimate directly based on it [20–24]. It is required that the probe signal be powerful in comparison to the loudspeaker signal in AFC, resulting in an audible probe noise signal [22–24]. Since the probe signal must be inaudible in the presence of the loudspeaker signal, a shaped probe signal can be utilized for feedback cancellation applications [24]. Decorrelation can be reduced and the loudspeaker sound quality can be preserved by BLPC vocoder-based adaptive feedback cancellation proposed in [10]. It involves replacing the high frequency part of the loudspeaker signal with a synthetic signal that sounds perceptually similar to, but is uncorrelated with, the desired signal. BLPC-vocoder based approach effectively reduces the high-frequency bias, but a small bias still persists in the feedback estimate due to correlation between the incoming acoustic signal and the low-frequency component of the reinforced signal. This biased estimate can result in an inefficient performance in environments where low frequency noise is high. Use of probe noise, which is assumed to be uncorrelated with the incoming signal, in the feedback estimation path can further reduce the bias.

In this paper, we focus on the application of probe noise signal in the feedback estimation path of the BLPC vocoder-based adaptive feedback cancellation for bias reduction. We derive expressions providing a system description and a detailed mathematical analysis of the proposed feedback-cancellation and bias reduction algorithm. It has been accepted that an estimation process driven by probe noise, which is assumed to be uncorrelated with the incoming acoustic signal, results in an unbiased optimal solution of the feedback path [19]. In this work, we show that the insertion of probe noise signal to drive the feedback canceller does not guarantee a perfectly unbiased solution, but achieves better performance compared to that of the existing BLPC vocoder-based design [10]. Here, we derive an optimal solution for both the unshaped and shaped probe signal-based adaptive feedback canceller. In addition, we also find the conditions of identifiability of the feedback path which facilitate an unbiased solution of the feedback canceller for the probe noise being correlated and uncorrelated with the white noise signal to the estimated desired signal model. The paper is divided into five sections including the introduction. We present a brief background of the basic AFC process and the BLPC vocoder-based feedback cancellation in Section 2. In Section 3, we propose a BLPC vocoder-based feedback canceller design with probe noise in the filter estimation path and also, a mathematical analysis of the proposed algorithm for both unshaped and shaped probe signal is presented using recursive least squares (RLS) algorithm for achieving faster convergence as compared to normalized least mean square (NLMS) algorithm. In Section 4, we define the identifiability conditions that facilitate optimal set of coefficients for the feedback canceller to obtain an unbiased solution, with the probe signal which is correlated and uncorrelated with the white noise input to estimated desired signal model. In Section 5, computer simulations are presented in support of the analysis.

The following notations have been adopted throughout the paper; $[\cdot]^T$ for the transpose of a matrix, $[\cdot]^{-1}$ for the inverse of a matrix, $E[\cdot]$ for the expectation operation, n for discrete-time index, k for discrete-time delay operator such that $k^{-1}m(n)=m(n-1)$, bold-faced capital letters for matrices, bold-faced small letters for vectors and $\mathbb{Z}$ for integers. A discrete-time filter of length L is represented as a polynomial $F(k)$ in terms of k^{-1} as $F(k)=f_0+f_1k^{-1}+\cdots+f_{L-1}k^{-L+1}$ or by its coefficient vector $\mathbf{f}=[f_0,f_1,\ldots,f_{L-1}]^T$. The signal $m(n)$ is filtered by $F(k)$ as $F(k)m(n)=\mathbf{f}^T(n)\mathbf{m}(n)$, with $\mathbf{m}(n)=[m(n),m(n-1),\ldots,m(n-L+1)]^T$. $F(\Omega,n)$ denotes the time-varying short-term frequency spectrum of $F(k)$.

2. Preliminaries

In this section, we present a brief background of adaptive feedback cancellation and the BLPC vocoder-based AFC. The analysis is presented considering that all time-domain signals are real valued and the filter order of the adaptive filter is sufficiently large to prevent undermodelling of the feedback path.

2.1. Adaptive feedback cancellation

A general block diagram of the adaptive feedback cancellation system is shown in Fig. 1. The incoming acoustic signal is assumed to be a wide sense stationary process and is denoted as $x(n)$. During the hearing-aid operation, the loudspeaker output signal $u(n)$ is processed by the acoustic environment and reaches the microphone as a feedback signal $f_B(n)$. Thus, it forms an acoustic feedback path as shown in the figure. For the analysis, original feedback path $F(k)$ is considered as an FIR filter of length L_f and coefficient vector $\mathbf{f}(n)=[f_0,f_1,\ldots,f_{L_f-1}]^T$. The adaptive filter $\widehat{F}(k)$ is also an FIR filter of length $L_{\hat{f}}$ and the coefficient vector $\hat{\mathbf{f}}(n)=\left[\hat{f}_0,\hat{f}_1,\ldots,\hat{f}_{L_{\hat{f}}-1}\right]^T$. The microphone output $y(n)$ is fed into the system as shown in Fig. 1 and it is expressed as

$$y(n)=x(n)+f_B(n), \tag{1}$$

where

$$f_B(n)=F(k)u(n). \tag{2}$$

The time-varying nature of $F(k)$ is tracked by $\widehat{F}(k)$ such that an estimate of the feedback signal $f_B(n)$, i.e., $v(n)$ can be obtained as

$$v(n)=\widehat{F}(k)u(n). \tag{3}$$

The feedback estimate $v(n)$ is subtracted from the microphone output $y(n)$ to produce an estimate of the original speech signal without the feedback signal, i.e. $e(n)$, which is represented as

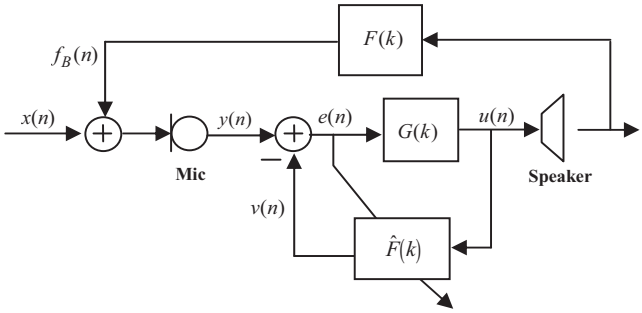

Fig. 1. General block diagram of AFC.

$$e(n) = y(n) - v(n). \tag{4}$$

It undergoes forward processing by a linear forward path $G(k)$ as shown in Fig. 1. The responsibility of the forward path $G(k)$ is to provide gain in order to reinforce $e(n)$ and reduce the listening effort required by the hearing impaired. The loudspeaker signal $u(n)$ is given by

$$u(n) = G(k)e(n). \tag{5}$$

In order for the feedback estimate to effectively cancel the original feedback path, adaptive filter must model the original feedback path perfectly. However, the existence of a closed loop in the adaptive feedback cancellation introduces a modelling error. The mean squared error $E[e^2(n)]$ can be written as

$$E[e^2(n)] = E[(y(n) - v(n))^2]. \tag{6}$$

Combining (1) and (3) and substituting in (6), we have

$$E[e^2(n)] = \sigma_y^2 - 2\hat{\mathbf{f}}^T(n)\mathbf{p}_{uy}(n) + \hat{\mathbf{f}}^T(n)\mathbf{R}_{uu}(n)\hat{\mathbf{f}}(n), \tag{7}$$

where σ_y^2 is the average power of $y(n)$,

$$\mathbf{p}_{uy}(n) = E[\mathbf{u}(n)y(n)] \tag{8}$$

and

$$\mathbf{R}_{uu}(n) = E[\mathbf{u}(n)\mathbf{u}^T(n)]. \tag{9}$$

Minimizing the mean-squared error in (7) with respect to $\hat{f}_i(n),\ i = 0, 1, \ldots, L_{\hat{f}} - 1$, we have

$$\hat{\mathbf{f}}_{opt}(n) = \mathbf{R}_{uu}^{-1}(n)\mathbf{p}_{uy}(n). \tag{10}$$

Eq. (10) is the Wiener-Hopf equation and represents the set of optimal coefficients for the adaptive filter. Combining (1) and (2) and substituting in (10), we get

$$\begin{aligned}\hat{\mathbf{f}}_{opt}(n) &= E\left[\mathbf{u}(n)\mathbf{u}^T(n)\right]^{-1} E\left[\mathbf{u}(n)\left(\mathbf{f}^T(n)\mathbf{u}(n) + x(n)\right)\right] \\ &= \mathbf{f}(n) + \underbrace{E\left[\mathbf{u}(n)\mathbf{u}^T(n)\right]^{-1} E\left[\mathbf{u}(n)x(n)\right]}_{\text{Bias term}}.\end{aligned} \tag{11}$$

Here, it can be observed that the Wiener-Hopf solution $\hat{\mathbf{f}}_{opt}(n)$ consists of the addition of the original feedback path $\mathbf{f}(n)$ and the product of the inverse of the auto-correlation matrix $\mathbf{R}_{uu}(n)$ of the loudspeaker signal and the cross-correlation matrix of the original acoustic input and the loudspeaker signal. To prevent an error in modelling the feedback path and achieve an unbiased estimation, it is necessary to reduce the correlation between $x(n)$ and $u(n)$. The presence of a biased estimate leads to a poor cancellation performance, thereby making this approach less useful for feedback cancellation [7].

2.2. Band-limited LPC vocoder based adaptive feedback cancellation

The fundamental idea of BLPC approach consists of producing a synthetic copy of the forward processed signal such that it is identical but uncorrelated with the desired sound signal [10]. The BLPC vocoder-based feedback cancellation scheme is shown in Fig. 2. The end point signal output $q(n)$ forms a feedback path from the loudspeaker to the microphone and enters the microphone as a feedback signal $f_B(n)$ along with $x(n)$. The microphone output is fed into the system and is given by (1). From Fig. 2, we get the feedback signal $f_B(n)$ and the feedback estimate $v(n)$ as

$$f_B(n) = F(k)q(n) \tag{12}$$

and

$$v(n) = \hat{F}(k)q(n), \tag{13}$$

The error signal $e(n)$ is subjected to further processing by the forward path $G(k)$ where $G(k)$ consists of a delay d_g of at least one sample, along with the transfer function $\overline{G}(k)$ which provides a frequency-specific reinforcement to the error signal to reduce the listening effort [10]. So, the forward path is represented as

$$G(k) = k^{-d_g}\,\overline{G}(k), d_g \geqslant 1 \tag{14}$$

The reinforced signal $u(n)$ is obtained as shown in (5) and undergoes linear predictive (LP) analysis and synthesis in order to estimate an all-pole filter model of the incoming sound signal and the residual gain. The reinforced signal vector is defined as $\mathbf{u}(n) = [u(n), u(n-1), \ldots, u(n - L_{\hat{f}} + 1)]^T$ and the estimated all-pole signal model $\hat{H}(k)$ of order P is given by

$$\hat{H}(k) = \frac{1}{1 - \sum_{l=1}^{p}\alpha_l k^{-l}}, \tag{15}$$

where α_l are the formants of the speech signal [17]. The prediction-error sequence $e_p(n)$ can be written as

$$e_p(n) = u(n) - \boldsymbol{\alpha}^T(n)\mathbf{u}(n-1), \tag{16}$$

where

$$\boldsymbol{\alpha}(n) = [1, \alpha_1, \alpha_2, \ldots, \alpha_P]^T. \tag{17}$$

During LP synthesis process, instead of $e_p(n)$, $\hat{H}(k)$ is driven by the white noise $w(n)$ of unit variance to obtain $u_{syn}(n)$ which is a synthetic copy of $u(n)$, such that $u_{syn}(n)$ sounds perceptually close to $u(n)$ as they have the same low-frequency spectrum. However, unlike $u(n)$, $u_{syn}(n)$ is not correlated with the desired signal $x(n)$ [10,25]. It is given by

$$u_{syn}(n) = \hat{H}(k)w(n), \tag{18}$$

Feedback is more likely to occur at high frequencies, i.e., frequencies above 2 kHz [5], where more gain reinforcement is required [7,10]. Thus, $u_{syn}(n)$ is processed through a high-pass FIR filter $H_P(k)$ of length M to obtain its high-frequency ($\geqslant$2 kHz) portion $u_{syn_hp}(n)$ as

$$u_{syn_hp}(n) = H_P(k)\hat{H}(k)w(n). \tag{19}$$

The low frequency (< 2 kHz) content of the reinforced signal is kept same as a significant portion of the energy of the speech signal is concentrated at low frequencies [10,17]. Hence, $u(n)$ is processed through a low-pass FIR filter $L_P(k)$ of length M to obtain the low-frequency component $u_{lp}(n)$ which is expressed as

$$u_{lp}(n) = L_P(k)u(n), \tag{20}$$

The loudspeaker signal $q(n)$ is the additive sum of $u_{syn_hp}(n)$ and $u_{lp}(n)$, i.e., $q(n) = u_{syn_hp}(n) + u_{lp}(n)$ with the signal vector

$$\mathbf{q}(n) = \mathbf{u}_{syn_hp}(n) + \mathbf{u}_{lp}(n) \tag{21}$$

where $\mathbf{q}(n) = \left[q(n), q(n-1), \ldots, q(n - L_{\hat{f}} + 1)\right]^T$ and, $\mathbf{u}_{syn_hp}(n)$ and $\mathbf{u}_{lp}(n)$ are defined similarly as $\mathbf{q}(n)$.

Combining (5), (19), (20) and (21), the loudspeaker signal $q(n)$ is obtained as

$$q(n) = H_P(k)\hat{H}(k)w(n) + G(k)L_P(k)e(n). \tag{22}$$

The low-frequency bias can be handled effectively by the feedback canceller [10,25]. Combining (1) and (13) and substituting in (6), we have

$$E[e^2(n)] = \sigma_y^2 - 2\hat{\mathbf{f}}^T(n)\mathbf{p}_{qy}(n) + \hat{\mathbf{f}}^T(n)\mathbf{R}_{qq}(n)\hat{\mathbf{f}}(n), \tag{23}$$

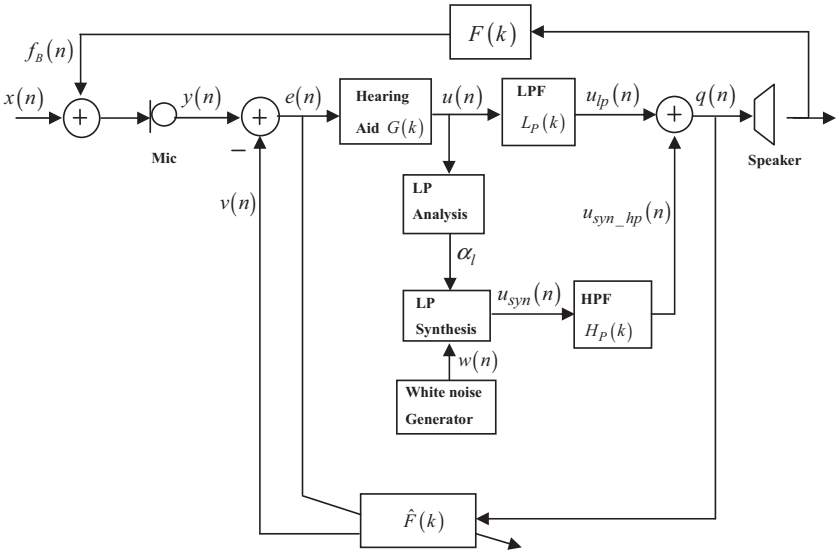

Fig. 2. BLPC vocoder-based adaptive feedback cancellation system [10,25].

where $\mathbf{p}_{qy}(n)$ and $\mathbf{R}_{qq}(n)$ are defined similarly as in (8) and (9), respectively. Minimizing mean-square error in (23) with respect to $\widehat{f}_i(n),\ i = 0, 1, \ldots, L_{\hat{f}} - 1$, we have

$$\widehat{\mathbf{f}}_{opt}(n) = \mathbf{R}_{qq}^{-1}(n)\mathbf{p}_{qy}(n). \tag{24}$$

Eq. (24) is the Wiener-Hopf equation and represents the set of optimal coefficients for $\widehat{F}(k)$. Combining (1) and (12), and substituting in (24), we obtain

$$\widehat{\mathbf{f}}_{opt}(n) = \mathbf{f}(n) + E[\mathbf{q}(n)\mathbf{q}^T(n)]^{-1}E[\mathbf{q}(n)x(n)] \tag{25}$$

Since the high-frequency component of the synthetic forward processed signal is assumed to be uncorrelated with the incoming sound signal, we have

$$E[\mathbf{u}_{syn_hp}(n)x(n)] = 0. \tag{26}$$

Combining (21) and (26) and substituting in (25), we get

$$\widehat{\mathbf{f}}_{opt}(n) = \mathbf{f}(n) + \underbrace{E\left[\mathbf{q}(n)\mathbf{q}^T(n)\right]^{-1}E\left[\mathbf{u}_{lp}(n)x(n)\right]}_{\text{Bias term}} \tag{27}$$

As evident from (27), the Wiener-Hopf solution $\widehat{\mathbf{f}}_{opt}(n)$ consists of the addition of the true feedback path $\mathbf{f}(n)$, and the product of the inverse of $\mathbf{R}_{qq}(n)$ and the cross-correlation of $x(n)$ and the low-frequency component of $u(n)$. Feedback oscillations are less likely to occur at low frequencies [5] and thus, from (27) it can be seen that the overall bias is effectively reduced by the BLPC approach as compared to the basic AFC in Section 2.1. However, a bias still persists in the feedback estimate and can lead to an inefficient performance in environments where the low-frequency noise is high, making this approach less effective for practical applications [10]. In the subsequent section, we introduce a BLPC vocoder-based feedback cancellation design with probe noise in the feedback estimation path to achieve an improved filter estimation as compared to the existing BLPC vocoder-based AFC.

3. Proposed adaptive feedback canceller

In this section, an optimal solution for the feedback canceller is derived where a probe noise signal is used as an input to the adaptive filter for the cancellation process. At first, we present a system description of the BLPC vocoder-based feedback canceller with probe noise followed by a detailed mathematical analysis of the proposed algorithm.

3.1. System description

Fig. 3 shows the block diagram representation of the proposed design. The forward signal-processing path $G(k)$ performs the function of frequency-dependent audio reinforcement [10]. The acoustic feedback path $F(k)$ is considered to be a discrete time FIR filter and can be modelled, due to the delays arising from the analogue to digital converter and digital to analogue converter, as [10,26]

$$F(k) = k^{-d_f}\overline{F}(k) \tag{28}$$

and

$$d_f = L_f - L_{\hat{f}}, \tag{29}$$

where d_f is a delay, L_f and $L_{\hat{f}}$ represent the length of $F(k)$ and $\overline{F}(k)$, respectively, and $\overline{F}(k)$ is that part of $F(k)$ which is adaptively tracked by $\widehat{F}(k)$. A probe noise signal $r(n)$ is added to $q(n)$ and also used as an input to the feedback estimation filter $\widehat{F}(k)$. It is a unit variance white Gaussian noise sequence with zero mean and is defined to be uncorrelated with $x(n)$. The resulting loudspeaker signal, as shown in Fig. 3, is $q_r(n) = q(n) + r(n)$ with the signal vector $\mathbf{q}_r(n) = [q_r(n), q_r(n-1), \ldots, q_r(n - L_{\hat{f}} + 1)]^T$ and $\mathbf{r}(n) = [r(n), r(n-1), \ldots, r(n - L_{\hat{f}} + 1)]^T$ and,

$$\mathbf{q}_r(n) = \mathbf{q}(n) + \mathbf{r}(n). \tag{30}$$

The feedback signal $f_B(n)$ is obtained from the loudspeaker signal $q_r(n)$ processed by the acoustic environment $F(k)$. The feedback estimate $v(n)$ is obtained from $q_r(n)$ which is processed by $\widehat{F}(k)$. The microphone signal $y(n)$ is obtained as

$$y(n) = x(n) + F(k)q_r(n). \tag{31}$$

Combining (4), (22), (30) and (31) and simplifying, we get

$$\begin{aligned} q_r(n) &= G(k)\left[L_P(k)\left\{x(n) + \left(F(k) - \widehat{F}(k)\right)q_r(n)\right\}\right] + H_P(k)\widehat{H}(k)w(n) + r(n) \\ &= S(k)G(k)L_P(k)x(n) + S(k)H_P(k)\widehat{H}(k)w(n) + S(k)r(n). \end{aligned} \tag{32}$$

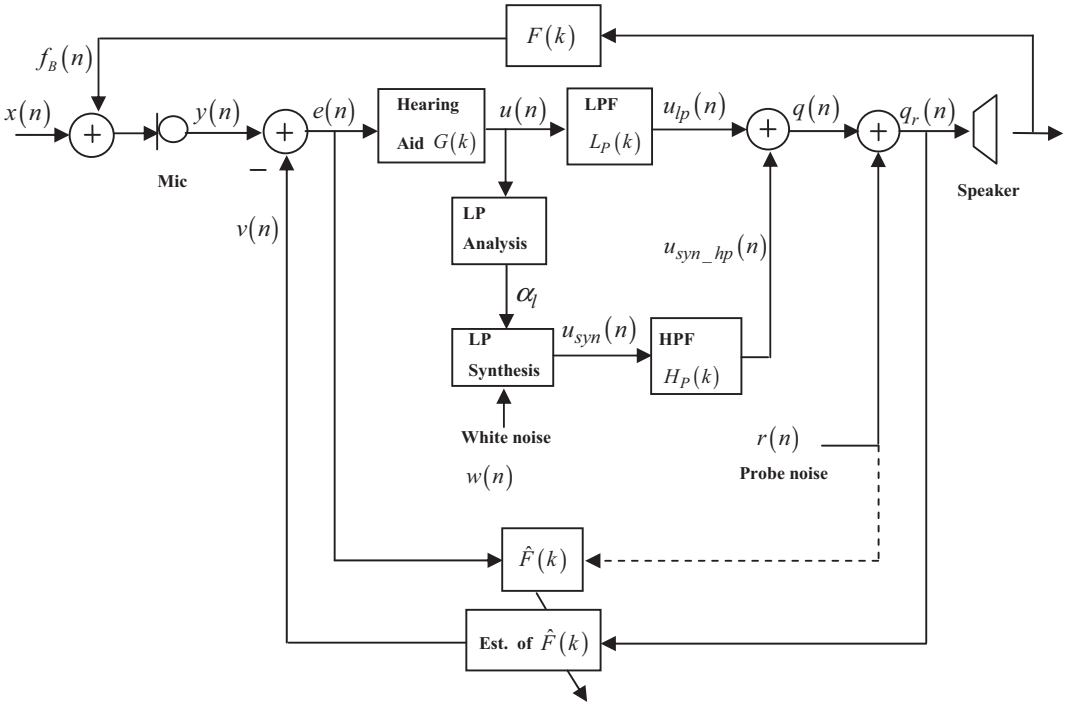

Fig. 3. BLPC vocoder-based adaptive feedback cancellation system with probe noise.

Here, we define a sensitivity function $S(k)$ as

$$S(k) = \frac{1}{\left[1 - G(k)L_P(k)(F(k) - \widehat{F}(k))\right]}, \tag{33}$$

which is unity when $F(k) = \widehat{F}(k)$. Let $G(\Omega)$, $L_P(\Omega)$, $F(\Omega)$ and $\widehat{F}(\Omega)$ denote the frequency spectra of $G(k)$, $L_P(k)$, $F(k)$ and $\widehat{F}(k)$, respectively, with angular frequency $\Omega \in [0, 2\pi]$. The term $\left[G(\Omega)L_P(\Omega)(F(\Omega) - \widehat{F}(\Omega))\right]$ is the loop response and plays a pivotal role in acoustic feedback control [19,26]. According to Nyquist stability criterion, oscillations will occur in the closed loop system of Fig. 3, thereby making it unstable, if

$$\begin{cases} \left|G(\Omega,n)L_P(\Omega,n)(F(\Omega,n) - \widehat{F}(\Omega,n))\right| \geqslant 1 \\ \angle G(\Omega,n)L_P(\Omega,n)(F(\Omega,n) - \widehat{F}(\Omega,n)) = j2\pi, j \in \mathbb{Z}, \end{cases} \tag{34}$$

where the magnitude response term $|G(\Omega,n)L_P(\Omega,n)(F(\Omega,n) - \widehat{F}(\Omega,n))|$ is the loop gain and the phase response $\angle G(\Omega,n)L_P(\Omega,n)(F(\Omega,n) - \widehat{F}(\Omega,n))$ is the loop phase for the single-channel sound reinforcement systems [19]. A closed loop system may become unstable and result in feedback oscillations, which are perceived as feedback howling by the user of the assistive listening device [19]. It is imperative for acoustic feedback cancellation techniques to prevent the condition in (34) from being satisfied. Taking this idea further, it can be observed from (33) that for preventing system instability due to $F(k)$, reinforcement $G(k)$ must be limited. The closer $\widehat{F}(k)$ is to $F(k)$, the nearer the system gets to its desired response with $S(k) = 1$. However, reducing the gain setting compromises the prime objective of signal reinforcement to compensate for the hearing deficiency in the users. Simplifying (32), we have

$$q_r(n) = S(k)\bar{q}_r(n), \tag{35}$$

where $\bar{q}_r(n)$ is given as

$$\bar{q}_r(n) = G(k)L_P(k)x(n) + H_P(k)\widehat{H}(k)w(n) + r(n). \tag{36}$$

Here, we obtain the loudspeaker signal in a modified form due to the probe noise signal being introduced in the BLPC vocoder-based AFC for bias reduction. In practical systems, the probe noise signal must be inaudible in the presence of the loudspeaker signal [22–24]. However, for effective estimation, it must be powerful enough as compared to the loudspeaker signal. A weak probe signal level lowers the ratio of probe signal to disturbing signal and reduces the convergence rate of the adaptive estimation filter by a factor of 30 as compared to traditional AFC systems, resulting in a compromised system with a degraded loudspeaker output [22–24]. In the proposed structure, shown in Fig. 3, we have used two separate signals $w(n)$ and $r(n)$, even though both of them are white noise. The white noise $w(n)$ is of unit variance and only serves as input to $\widehat{H}(k)$ to produce the synthetic copy $u_{syn}(n)$ of $u(n)$. The residual gain extracted from $u(n)$ during LP analysis is utilized during the synthesis stage such that $u_{syn}(n)$ sounds similar to $u(n)$. Thus, there is no need to provide external gain to $w(n)$ to increase its power level. However, $r(n)$ is an external probe signal, which is considered to be white Gaussian noise with unit variance and can be used after applying a gain factor.

3.2. Algorithm analysis

3.2.1. RLS Algorithm analysis

Here, we present a mathematical analysis for the proposed adaptive feedback cancellation scheme as shown in Fig. 3. We have used the RLS algorithm for achieving faster convergence as compared to mean square error based algorithms, even though it brings a higher computational complexity. The analysis is presented considering that all signals are real-valued and the filter order of the adaptive filter is sufficiently large to prevent under-modelling of the feedback path. The feedback estimate $v(n)$ is given as

$$v(n) = \sum_{k=0}^{L_{\hat{f}}-1} \hat{f}(k) r(n-k). \tag{37}$$

As observed from (37), the probe noise $r(n)$ is input to the feedback canceller and drives the adaptive filter to estimate the feedback path $F(k)$. The actual correlation between the desired signal and the loudspeaker signal in the closed loop will not be of importance when the probe signal, which is uncorrelated with both the desired signal and the loudspeaker signal, drives the estimation process in the feedback cancellation system [12,22]. The total squared error $\varepsilon(n)$ at the nth iteration can be written as

$$\varepsilon(n) = \sum_{i=0}^{n} e^2(i), \tag{38}$$

where $e(i)$ is given as

$$e(i) = y(i) - v(i). \tag{39}$$

Modifying the Least Squares (LS) approach by including an exponential forgetting factor $\lambda^{n-i}, (0 < \lambda \leqslant 1)$ to each error term and combining (38) and (39), we have

$$\varepsilon'(n) = \sum_{i=0}^{n} (y'(i) - v'(i))^2, \tag{40}$$

where

$$y'(i) = \sqrt{\lambda^{n-i}}\, y(i) \tag{41}$$

and

$$v'(i) = \sqrt{\lambda^{n-i}}\, v(i). \tag{42}$$

Combining (37), (40), (41) and (42), we get

$$\varepsilon'(n) = \sum_{i=0}^{n} \lambda^{n-i} y^2(i) - 2 \sum_{k=0}^{L_{\hat{f}}-1} \hat{f}(k) \boldsymbol{p}_{ry}(n) + \sum_{k=0}^{L_{\hat{f}}-1} \sum_{m=0}^{L_{\hat{f}}-1} \hat{f}(k) \hat{f}(m) \mathbf{R}_{rr}(n), \tag{43}$$

where

$$\mathbf{R}_{rr}(n) = \sum_{i=0}^{n} \lambda^{n-i} \mathbf{r}(i) \mathbf{r}^T(i), \tag{44}$$

and

$$\mathbf{p}_{ry}(n) = \sum_{i=0}^{n} \lambda^{n-i} \mathbf{r}(i) y(i). \tag{45}$$

Minimizing $\varepsilon'(n)$ in (43) with respect to $\hat{f}_i(n), i = 0, 1, \ldots, L_{\hat{f}} - 1$, we get

$$\hat{\mathbf{f}}_{opt}(n) = \mathbf{R}_{rr}^{-1}(n) \mathbf{p}_{ry}(n). \tag{46}$$

The above equation (46) is the Wiener-Hopf equation and represents an optimal set of coefficients $\hat{\mathbf{f}}_{opt}(n)$ for the feedback canceller. Combining (44), (45) and substituting in (46), we have

$$\hat{\mathbf{f}}_{opt}(n) = \left[\sum_{i=0}^{n} \lambda^{n-i} \mathbf{r}(i) \mathbf{r}^T(i) \right]^{-1} \left[\sum_{i=0}^{n} \lambda^{n-i} \mathbf{r}(i) y(i) \right]. \tag{47}$$

Combining (28), (31), and (35), we get the microphone signal as

$$y(n) = x(n) + k^{-d_f} \overline{F}(k) S(k) \bar{q}_r(n). \tag{48}$$

In order to derive the optimal solution for the feedback canceller, let us consider an IIR causal filter $A(z)$ with a coefficient vector $\mathbf{a}(n) = [a_0, a_1, a_2, \ldots]$ such that

$$A(k) = F(k) S(k). \tag{49}$$

Substituting (49) in (48), we get

$$\begin{aligned} y(n) &= x(n) + (A(k) - A_{FIR}(k)) \bar{q}_r(n) + A_{FIR}(k) \bar{q}_r(n) \\ &= x(n) + A_{FIR}(k) \bar{q}_r(n) + \psi(n), \end{aligned} \tag{50}$$

where $A_{FIR}(k)$ is the FIR filter with a coefficient vector $\mathbf{a}_{FIR}(n) = [a_0, a_1, \ldots, a_{L_{\hat{f}}-1}]$, i.e. initial $L_{\hat{f}}$ coefficients of $A(k)$, and $\psi(n)$ is given as

$$\psi(n) = (A(k) - A_{FIR}(k)) \bar{q}_r(n) = k^{-L_{\hat{f}}} A_R(k) \bar{q}_r(n), \tag{51}$$

where $k^{-L_{\hat{f}}} A_R(k)$ is the residual impulse response with a coefficient vector given as $\left[a_{L_{\hat{f}}} + a_{L_{\hat{f}}+1} k^{-1} + \cdots \right]$. Combining (36) and (51) and substituting in (50), we get

$$\begin{aligned} y(n) &= x(n) + (A_{FIR}(k) + k^{-L_{\hat{f}}} A_R(k)) \bar{q}_r(n) \\ &= x(n) + \overline{G}(k) A_{FIR}(k) L_P(k) x(n - d_g) + A_{FIR}(k) H_P(k) \hat{H}(k) w(n) \\ &\quad + A_{FIR}(k) r(n) + k^{-L_{\hat{f}}} A_R(k) \overline{G}(k) L_P(k) x(n - d_g) + k^{-L_{\hat{f}}} A_R(k) r(n) \\ &\quad + k^{-L_{\hat{f}}} A_R(k) H_P(k) \hat{H}(k) w(n). \end{aligned} \tag{52a}$$

Replacing $\overline{G}(k)$ of length $L_{\bar{g}}$ by its coefficient vector $\bar{\mathbf{g}}(n)$, complementary filter pair of low-pass filter $L_P(k)$ and high-pass filter $H_P(k)$ by their coefficient vectors $\boldsymbol{\beta}$ and $\boldsymbol{\gamma}$, respectively, estimated signal model $\hat{H}(k)$ by its coefficient vector $\boldsymbol{\alpha}(n)$ and, $A_{FIR}(k)$ by its coefficient vector $\mathbf{a}_{FIR}(n)$, we can rewrite (52a) as

$$\begin{aligned} y(n) = x(n) &+ \sum_{j=0}^{L_{\bar{g}}-1} \bar{g}_j \sum_{b=0}^{L_{\hat{f}}-1} a_b \sum_{m=0}^{M-1} \beta_m x(n - d_g - j - b - d) \\ &+ \sum_{b=0}^{L_{\hat{f}}-1} a_b \sum_{m=0}^{M-1} \gamma_m \sum_{l=1}^{P} \alpha_l w(n - b - m - l) \\ &+ \sum_{b=0}^{L_{\hat{f}}-1} a_b r(n - b) + \sum_{j=0}^{L_{\bar{g}}-1} \bar{g}_j \sum_{m=0}^{M-1} \beta_m x_{ar}(n - L_{\hat{f}} - d_g - j - m) \\ &+ \sum_{m=0}^{M-1} \gamma_m \sum_{l=1}^{P} \alpha_l w_{ar}(n - L_{\hat{f}} - m - l) + r_{ar}(n - L_{\hat{f}}), \end{aligned} \tag{52b}$$

where

$$k^{-L_{\hat{f}}} A_R(k) x(i) = x_{ar}(i - L_{\hat{f}}), \tag{53}$$

$$k^{-L_{\hat{f}}} A_R(k) w(i) = w_{ar}(i - L_{\hat{f}}), \tag{54}$$

and

$$k^{-L_{\hat{f}}} A_R(k) r(i) = r_{ar}(i - L_{\hat{f}}). \tag{55}$$

Here, we have represented (52) into two ways, i.e. (52a) and (52b), for simplification and a better understanding. We use (52a) in Section 3.2.2 for NLMS algorithm analysis of the proposed structure in Fig. 3, while (52b) is used in the continuing recursive least squares algorithm analysis. Substituting (52b) in (47), we obtain an optimal set of coefficients $\hat{\mathbf{f}}_{opt}(n)$ for the feedback canceller as

$$\hat{\mathbf{f}}_{opt}(n)=\mathbf{a}_{FIR}(n)+\left[\sum_{i=0}^{n}\lambda^{n-i}\mathbf{r}(i)\mathbf{r}^{T}(i)\right]^{-1}\begin{bmatrix}\sum_{i=0}^{n}\lambda^{n-i}\mathbf{r}(i)x(i)\\+\sum_{i=0}^{n}\lambda^{n-i}\sum_{j=0}^{L_{\bar{g}}-1}\bar{g}_j\sum_{b=0}^{L_{\hat{f}}-1}a_b\sum_{m=0}^{M-1}\beta_m\mathbf{r}(i)x(i-d_g-j-b-d)\\+\sum_{i=0}^{n}\lambda^{n-i}\sum_{b=0}^{L_{\hat{f}}-1}a_b\sum_{m=0}^{M-1}\gamma_m\sum_{l=1}^{P}\alpha_l\mathbf{r}(i)w(i-b-m-l)\\+\sum_{i=0}^{n}\lambda^{n-i}\sum_{j=0}^{L_{\bar{g}}-1}\bar{g}_j\sum_{m=0}^{M-1}\beta_m\mathbf{r}(i)x_{ar}(i-L_{\hat{f}}-d_g-j-m)\\+\sum_{i=0}^{n}\lambda^{n-i}\sum_{m=0}^{M-1}\gamma_m\sum_{l=1}^{P}\alpha_l\mathbf{r}(i)w_{ar}(i-L_{\hat{f}}-m-l)\\+\sum_{i=0}^{n}\lambda^{n-i}\mathbf{r}(i)\mathbf{r}_{ar}^{T}(i-L_{\hat{f}})\end{bmatrix}. \tag{56}$$

We consider the probe signal $r(n)$ to be an unshaped white Gaussian noise signal such that $\sum_{i=0}^{n}\lambda^{n-i}\mathbf{r}(i)\mathbf{r}_{ar}^{T}(i-L_{\hat{f}})=0$. Assuming $r(n)$ and $x(n)$ as well as $r(n)$ and $x_{ar}(n)$ to be orthogonal over time i (i.e. uncorrelated), (56) can be rewritten as

$$\hat{\mathbf{f}}_{opt}(n)=\mathbf{a}_{FIR}(n)+\underbrace{\left[\sum_{i=0}^{n}\lambda^{n-i}\mathbf{r}(i)\mathbf{r}^{T}(i)\right]^{-1}\begin{bmatrix}\sum_{i=0}^{n}\lambda^{n-i}\sum_{b=0}^{L_{\hat{f}}-1}a_b\sum_{m=0}^{M-1}\gamma_m\sum_{l=1}^{P}\alpha_l\,\mathbf{r}(i)w(i-b-m-l)\\+\sum_{i=0}^{n}\lambda^{n-i}\sum_{m=0}^{M-1}\gamma_m\sum_{l=1}^{P}\alpha_l\,\mathbf{r}(i)w_{ar}(i-L_{\hat{f}}-m-l)\end{bmatrix}}_{\text{Bias term}}. \tag{57}$$

An optimal solution for an unshaped probe signal, which is assumed to be non orthogonal (correlated) to white noise input of the estimated incoming-signal model, i.e. $w(n)$ and also with $w_{ar}(n)$, is represented by (57). The power of the probe noise signal must be high enough as compared to the loudspeaker signal, as required in practical systems [24]. However, such a probe signal is audible and, therefore, annoying to the users. Masking effect of the human auditory system can be exploited to obtain an inaudible probe noise signal [24]. For $r(n)$ that is masked or shaped [26],

$$\sum_{i=0}^{n}\lambda^{n-i}\mathbf{r}(i)\mathbf{r}_{ar}^{T}(i-L_{\hat{f}})\neq 0. \tag{58}$$

Making use of (58) in (56) and assuming probe noise signal and $x(n)$ to be orthogonal over time i, an optimal set of coefficients $\hat{\mathbf{f}}_{opt}(n)$ of the feedback canceller for a shaped probe noise is obtained as

$$\hat{\mathbf{f}}_{opt}(n)=\mathbf{a}_{FIR}(n)+\underbrace{\left[\sum_{i=0}^{n}\lambda^{n-i}\mathbf{r}(i)\mathbf{r}^{T}(i)\right]^{-1}\begin{bmatrix}\sum_{i=0}^{n}\lambda^{n-i}\sum_{b=0}^{L_{\hat{f}}-1}a_b\sum_{m=0}^{M-1}\gamma_m\sum_{l=0}^{P-1}\alpha_l\,\mathbf{r}(i)w(i-b-m-l)\\+\sum_{i=0}^{n}\lambda^{n-i}\sum_{m=0}^{M-1}\gamma_m\sum_{l=0}^{P-1}\alpha_l\,\mathbf{r}(i)w_{ar}(i-L_{\hat{f}}-m-l)\\+\sum_{i=0}^{n}\lambda^{n-i}\mathbf{r}(i)\mathbf{r}_{ar}^{T}(i-L_{\hat{f}})\end{bmatrix}}_{\text{Bias term}}. \tag{59}$$

In (59), it is assumed that the shaped probe signal is non orthogonal to either $w(n)$ or $w_{ar}(n)$. If $r(n)$ and $w(n)$ as well as $r(n)$ and $w_{ar}(n)$ are orthogonal to each other, we have

$$\sum_{i=0}^{n}\lambda^{n-i}\sum_{b=0}^{L_{\hat{f}}-1}a_b\sum_{m=0}^{M-1}\gamma_m\sum_{l=0}^{P-1}\alpha_l\mathbf{r}(i)w(i-b-m-l)=0 \tag{60}$$

and,

$$\sum_{i=0}^{n}\lambda^{n-i}\sum_{m=0}^{M-1}\gamma_m\sum_{l=0}^{P-1}\alpha_l\mathbf{r}(i)w_{ar}(i-L_{\hat{f}}-m-l)=0. \tag{61}$$

Combining (60) and (61) and substituting in (57), the optimal solution of the feedback canceller is obtained for an unshaped probe noise signal $r(n)$, which is orthogonal to $w(n)$ as well as $w_{ar}(n)$, as

$$\hat{\mathbf{f}}_{opt}(n)=\mathbf{a}_{FIR}(n). \tag{62}$$

It can be seen from (62) that the Wiener-Hopf solution for the feedback canceller is the product of original feedback path $F(k)$ and sensitivity function $S(k)$, instead of $F(k)$. The Wiener-Hopf solution for a

shaped probe signal $r(n)$ which is orthogonal to $w(n)$ as well as $w_{ar}(n)$ can be obtained by combining (60) and (61) and substituting in (59) as

$$\widehat{\mathbf{f}}_{opt}(n)=\mathbf{a}_{FIR}(n)+\underbrace{\left[\sum_{i=0}^{n}\lambda^{n-i}\mathbf{r}(i)\mathbf{r}^{T}(i)\right]^{-1}\left[\sum_{i=0}^{n}\lambda^{n-i}\mathbf{r}(i)\mathbf{r}_{ar}^{T}\left(i-L_{\hat{f}}\right)\right]}_{\text{Bias term}} \tag{63}$$

As evident from (63), the optimal solution to feedback canceller $\widehat{F}(k)$ is the product of $F(k)$ and $S(k)$ along with a bias introduced due to shaping of the probe noise.

We find that the optimal solution for an unshaped probe signal $r(n)$, which is assumed to be orthogonal to $w(n)$ as well as $w_{ar}(n)$, is unbiased as shown in (62). We also find that the bias terms exist in the optimal solution of the feedback canceller for an unshaped probe noise in (57) and for a shaped probe noise in (59) and (63). In these three cases, we find that the bias term consists of correlation of the probe noise $r(n)$ with $w(n)$, $w_{ar}(n)$, or $r_{ar}(n)$. In basic AFC approach and BLPC vocoder-based approach, the bias term in (11) and (27) consists of correlation between the incoming desired signal and the loudspeaker signal which are acoustic signals and are beyond the control of the user or the hearing aid designer. However, probe noise signal is under the control of the designer and can be tuned accordingly to achieve a better feedback cancellation performance.

Our main aim is to find bias by the application of RLS and NLMS algorithms in the proposed structure. RLS algorithm provides faster convergence in comparison to NLMS. We shall start the analysis with the application of RLS algorithm [27]. Let $\widehat{F}(z)$ be the wiener filter with coefficients $\mathbf{f}'(n)$ defined as

$$\mathbf{f}'(n)=\hat{\mathbf{f}}_{opt}(n). \tag{64}$$

Substituting (46) in (64), we obtain

$$\mathbf{f}(n)=\mathbf{R}_{rr}^{-1}(n)\mathbf{p}_{ry}(n). \tag{65}$$

$\mathbf{R}_{rr}(n)$ can be recursively computed as $\mathbf{R}_{rr}(n)=\lambda\mathbf{R}_{rr}(n-1)+\mathbf{r}(n)\mathbf{r}^{T}(n)$ and taking its inverse, we have

$$\mathbf{R}_{rr}^{-1}(n)=\lambda^{-1}[\mathbf{R}_{rr}(n-1)+\mathbf{r}(n)\lambda^{-1}\mathbf{r}^{T}(n)]^{-1}. \tag{66}$$

According to Matrix Inversion Lemma [27]

$$(\mathbf{A}+\mathbf{BCB}^{T})^{-1}=\mathbf{A}^{-1}-\mathbf{A}^{-1}\mathbf{B}(\mathbf{C}^{-1}+\mathbf{B}^{T}\mathbf{A}^{-1}\mathbf{B})^{-1}\mathbf{B}^{T}\mathbf{A}^{-1}, \tag{67}$$

where $\mathbf{B}$ is $n\times k$ and $\mathbf{C}$ is $k\times k$ ($k=0,1,\ldots,L_{\hat{f}}-1$) and non-singular matrix. Putting $\mathbf{A}=\mathbf{R}_{rr}^{-1}(n-1),\mathbf{B}=\mathbf{r}(n)$ and $\mathbf{C}=\lambda^{-1}$ in (67), we have

$$\mathbf{R}_{rr}^{-1}(n)=\lambda^{-1}[\mathbf{R}_{rr}^{-1}(n-1)-\mathbf{k}(n)\mathbf{r}^{T}(n)\mathbf{R}_{rr}^{-1}(n-1)]. \tag{68}$$

where $\mathbf{k}(n)$ is an $L_{\hat{f}}$-dimensional vector of Kalman gains such that

$$\mathbf{k}(n)=\frac{\mathbf{R}_{rr}^{-1}(n-1)\mathbf{r}(n)}{\lambda+\mathbf{r}^{T}(n)\mathbf{R}_{rr}^{-1}(n-1)\mathbf{r}(n)}. \tag{69}$$

The use of algebraic recursion in (68) allows for the computation of $\mathbf{R}_{rr}^{-1}(n)$ without computing a matrix inversion [27]. Also, $\mathbf{p}_{ry}(n)$ can be recursively computed as

$$\mathbf{p}_{ry}(n)=\lambda\mathbf{p}_{ry}(n-1)+\mathbf{r}(n)y(n). \tag{70}$$

Combining (37), (39), (65), (68) and (70) and simplifying, we obtain the weight update equation for the recursive least squares algorithm as

$$\mathbf{f}'(n)=\mathbf{f}'(n-1)+\mathbf{k}(n)e(n). \tag{71}$$

Combining equations (37), (39), (68), (69) and (71), algorithm for the BLPC vocoder-based adaptive feedback canceller with probe noise is obtained.

3.2.2. NLMS algorithm analysis

The mean square error cost function can be expanded as

$$E[e^{2}(n)]=\sigma_{y}^{2}-2\hat{\mathbf{f}}^{T}(n)\mathbf{p}_{ry}(n)+\hat{\mathbf{f}}^{T}(n)\mathbf{R}_{rr}(n)\hat{\mathbf{f}}(n), \tag{72}$$

where σ_{y}^{2} is average power of $y(n)$ and $\mathbf{p}_{ry}(n)$ and $\mathbf{R}_{rr}(n)$ are defined similarly as in (8) and (9), respectively. Minimizing the cost function in (72) with respect to $\hat{f}_{i}(n), i=0,1,\ldots,L_{\hat{f}}-1$, the Wiener filter with optimum coefficients is obtained as

$$\hat{\mathbf{f}}_{opt}(n)=\mathbf{R}_{rr}^{-1}(n)\mathbf{p}_{ry}(n). \tag{73}$$

Assuming sufficient filter order for $\widehat{F}(k)$ so that it models $F(k)$ efficiently, the optimal set of coefficients for the feedback canceller can be obtained by substituting (52a) in (73) as

$$\hat{\mathbf{f}}_{opt}(n)=E[\mathbf{r}(n)\mathbf{r}^{T}(n)]^{-1}\begin{bmatrix}E[\mathbf{r}(n)x(n)]+\overline{G}(k)A_{FIR}(k)L_{P}(k)E[\mathbf{r}(n)x(n-d_{g})]\\+A_{FIR}(k)H_{P}(k)\widehat{H}(k)E[\mathbf{r}(n)w(n)]\\+A_{FIR}(k)E[\mathbf{r}(n)\mathbf{r}^{T}(n)]+E[\mathbf{r}(n)\mathbf{r}_{ar}^{T}(n-L_{\hat{f}})]\\+\overline{G}(k)L_{P}(k)E[\mathbf{r}(n)x_{ar}(n-(L_{\hat{f}}+d_{g}))]\\+H_{P}(k)\widehat{H}(k)E[\mathbf{r}(n)w_{ar}(n-L_{\hat{f}})]\end{bmatrix}. \tag{74}$$

Further simplifying (74), we get

$$\hat{\mathbf{f}}_{opt}(n)=\mathbf{a}_{FIR}(n)+E[\mathbf{r}(n)\mathbf{r}^{T}(n)]^{-1}\begin{bmatrix}E[\mathbf{r}(n)x(n)]+\overline{G}(k)A_{FIR}(k)L_{P}(k)E[\mathbf{r}(n)x(n-d_{g})]\\+A_{FIR}(k)H_{P}(k)\widehat{H}(k)E[\mathbf{r}(n)w(n)]\\+E[\mathbf{r}(n)\mathbf{r}_{ar}^{T}(n-L_{\hat{f}})]\\+\overline{G}(k)L_{P}(k)E[\mathbf{r}(n)x_{ar}(n-(L_{\hat{f}}+d_{g}))]\\+H_{P}(k)\widehat{H}(k)E[\mathbf{r}(n)w_{ar}(n-L_{\hat{f}})]\end{bmatrix}, \tag{75}$$

where $x_{ar}(n-L_{\hat{f}})$, $w_{ar}(n-L_{\hat{f}})$ and $r_{ar}(n-L_{\hat{f}})$ are obtained similarly as in (53). Let us consider that the probe signal $r(n)$ is an unshaped white Gaussian noise signal and is uncorrelated with the incoming signal $x(n)$. The optimal set of coefficients for such a probe noise signal can be obtained by rewriting (75) as

$$\widehat{\mathbf{f}}_{opt}(n)=\mathbf{a}_{FIR}(n)+\underbrace{E\left[\mathbf{r}(n)\mathbf{r}^{T}(n)\right]^{-1}\begin{bmatrix}A_{FIR}(k)H_{P}(k)\widehat{H}(k)E\left[\mathbf{r}(n)w(n)\right]\\+\widehat{H}(k)H_{P}(k)E\left[\mathbf{r}(n)w_{ar}\left(n-L_{\hat{f}}\right)\right]\end{bmatrix}}_{\text{Bias term}}. \tag{76}$$

Eq. (76) represents the optimal solution for an unshaped probe noise signal that is correlated with white noise input of the estimated incoming-signal model, i.e., $w(n)$ and also with $w_{ar}(n)$. The optimal solution for the feedback canceller when probe noise signal is shaped and is assumed to be uncorrelated with $x(n)$ is given as

$$\widehat{\mathbf{f}}_{opt}(n)=\mathbf{a}_{FIR}(n)+\underbrace{E\left[\mathbf{r}(n)\mathbf{r}^{T}(n)\right]^{-1}\begin{bmatrix}A_{FIR}(k)H_{P}(k)\widehat{H}(k)E\left[\mathbf{r}(n)w(n)\right]\\+\widehat{H}(k)H_{P}(k)E\left[\mathbf{r}(n)w_{ar}\left(n-L_{\hat{f}}\right)\right]\\+E\left[\mathbf{r}(n)\mathbf{r}_{ar}^{T}\left(n-L_{\hat{f}}\right)\right]\end{bmatrix}}_{\text{Bias term}}. \tag{77}$$

In (77), it is assumed that the shaped probe signal is correlated with $w(n)$ and $w_{ar}(n)$. The optimal set of coefficients for the feedback

canceller, when the unshaped probe noise signal is considered to be uncorrelated with $w(n)$ and $w_{ar}(n)$ is obtained from (76) as

$$\hat{\mathbf{f}}_{opt}(n) = \mathbf{a}_{FIR}(n). \tag{78}$$

The Wiener-Hopf solution for the shaped probe signal $r(n)$, which is assumed to be uncorrelated with $w(n)$ and $w_{ar}(n)$ can be obtained from (77) as

$$\hat{\mathbf{f}}_{opt}(n) = \mathbf{a}_{FIR}(n) + \underbrace{E\left[\mathbf{r}(n)\mathbf{r}^T(n)\right]^{-1} E\left[\mathbf{r}(n)\mathbf{r}_{ar}^T\left(n - L_{\hat{f}}\right)\right]}_{\text{Bias term}}. \tag{79}$$

Let $\hat{F}(z)$ be the Wiener filter with coefficients $\mathbf{f}'(n)$ such that

$$\mathbf{f}'(n) = \hat{\mathbf{f}}_{opt}(n). \tag{80}$$

For Steepest Descent,

$$\mathbf{f}(n+1) = \mathbf{f}(n) + \mu(n)[\mathbf{p}_{ry}(n) - \mathbf{R}_{rr}(n)\mathbf{f}(n)], \tag{81}$$

where $\mu(n)$ is the step-size parameter. The weight update equation for the NLMS algorithm is obtained by substituting the values the value of $\mathbf{p}_{ry}(n)$ and $\mathbf{R}_{rr}(n)$ in (81) and simplifying as

$$\mathbf{f}'(n+1) = \mathbf{f}'(n) + \mu(n)e(n)\mathbf{r}(n), \tag{82}$$

where

$$\mu(n) = \frac{\tilde{\mu}}{\delta + \mathbf{r}^T(n)\mathbf{r}(n)}. \tag{83}$$

In (83) the normalized step size $\tilde{\mu}$ and the off-set parameter δ are constants, with $0 < \tilde{\mu} < 2$ [27]. From the NLMS algorithm analysis, we find that the optimal solutions and bias term for an unshaped probe noise in (76) and (78) and for a shaped probe noise in (77) and (79) are similar to the results and analysis done using RLS algorithm. In the subsequent section, we check for the conditions that must be fulfilled to achieve an unbiased adaptive estimate of the feedback path, considering $r(n)$ and $w(n)$ to be orthogonal and non orthogonal to each other.

4. Identifiability conditions for feedback canceller in the proposed system

We now discuss the conditions for identifiability that will facilitate an optimal set of coefficients for the feedback canceller such that the desired solution $\hat{F}(k) = F(k)$ can be obtained for the BLPC vocoder-based AFC system with probe noise, as shown in Fig. 3. We analyse the role of d_g and L_f and find out the relationship that must exist between them to achieve an unbiased estimate of the feedback path. Let us assume that the probe signal $r(n)$ and the white noise input $w(n)$ are orthogonal (uncorrelated) to each other. Substituting (33) in (49), we get

$$\begin{aligned} A(k) &= \frac{F(k)}{1 - G(k)L_P(k)(F(k) - \hat{F}(k))} \\ &= F(k) + A(k)G(k)L_P(k)\Delta(k), \end{aligned} \tag{84}$$

where

$$\Delta(k) = (F(k) - \hat{F}(k)). \tag{85}$$

Substituting (14) in (84), we get

$$A(k) = F(k) + k^{-d_g}A(k)\overline{G}(k)L_P(k)\Delta(k). \tag{86}$$

Expressing (86) in terms of coefficient vectors of $A(k)$ and $F(k)$, we get

$$\begin{aligned} a_0 + a_1k^{-1} + \ldots = [f_0 + f_1k^{-1} + \cdots + f_{L_f-1}k^{-L_f+1}] \\ + k^{-d_g}A(k)\overline{G}(k)L_P(k)\Delta(k). \end{aligned} \tag{87}$$

It is observed from (87) that the term $G(k)L_P(k)\Delta(k)$ contains delay d_g and also that $[a_0, a_1, \ldots, a_{d_g-1}]$, which are the initial d_g coefficients of $A(k)$, will coincide with $[f_0, f_1, \ldots, f_{d_g-1}]$, which are the initial d_g coefficients of the feedback path. If the delay d_g is such that $d_g \geqslant L_f$, the initial d_g coefficients of the feedback path will not be biased and thus, $F(k)$ can be completely obtained from the initial L_f coefficients of $A(k)$ as

$$A(k) = f_0 + f_1k^{-1} + \cdots + f_{L_f-1}k^{-L_f+1} + \cdots + a_{d_g-1}k^{-d_g+1} + \cdots \tag{88}$$

Thus, using a delay $d_g \geqslant L_f$, an unbiased optimal solution for $F(k)$ can be achieved from the first L_f coefficients of $A(k)$ by decoupling the solution in (87). We consider $\hat{A}(k)$ as an unbiased estimate of $A(k)$. Then, the feedback canceller may be written as

$$\hat{A}(k) = \hat{F}(k)S(k). \tag{89}$$

Multiplying both sides of (85) by $S(k)$, we get

$$\Delta(k) = (F(k) - \hat{F}(k))S(k)(1 - G(k)L_P(k)\Delta(k)). \tag{90}$$

Combining (49) and (89), we can write (90) as

$$\begin{aligned} \Delta(k) &= (A(k) - \hat{A}(k))(1 - G(k)L_P(k)\Delta(k)) \\ &= \frac{A(k) - \hat{A}(k)}{1 + G(k)L_P(k)(A(k) - \hat{A}(k))}. \end{aligned} \tag{91}$$

It can be observed from (91) that, as $\hat{A}(k) \rightarrow A(k)$, $\Delta(k) \rightarrow 0$. Thus, the bias term in (87) is reduced as the system converges over time, i.e. $A(k) \rightarrow F(k)$.

Let us now assume that the probe signal $r(n)$ and the white noise input $w(n)$ are non-orthogonal (correlated). For $r(n)$ and $w(n)$ which are not orthogonal to each other, $[a_0, a_1, \ldots, a_{d_g-1}]$ coincide with $[f_0, f_1, \ldots, f_{d_g-1}]$ as discussed earlier for the case of probe signal and white noise signal being orthogonal. Thus, an unbiased optimal solution for $F(k)$ can be achieved from the initial L_f coefficients of $A(k)$ by decoupling the solution in (87) for $d_g \geqslant L_f$. Considering an unbiased feedback path estimate similarly as in (89), we achieve the same result as (91) such that as $\hat{A}(k) \rightarrow A(k)$, $\Delta(k) \rightarrow 0$ and the bias term in (87) is reduced as the system converges over time, i.e., $A(k) \rightarrow F(k)$.

5. Simulation results and discussion

In this section, we consider the filter estimation part of the adaptive feedback canceller. The aim of simulations presented in this section is to verify the mathematical analysis performed in Section 3. The proposed AFC using probe noise and the existing BLPC vocoder-based AFC design are simulated on a common simulation platform as shown in [10,25]. A sampling frequency of 16 kHz is used for simulations. The forward processing path consists of a delay of 20 samples along with a frequency-dependent gain setting which is set to 15 dB and 35 dB for frequencies below and above 2 kHz, respectively. The original feedback path $F(k)$ and the adaptive filter $\hat{F}(k)$ are considered to be FIR filters of order 50 and the delay d_f of the feedback path is set to 20 samples. The LP analysis provides a stable signal model estimate of order 20 using an analysis window length of 20 ms. The probe signal $r(n)$ is considered as a zero mean and unit variance white Gaussian noise signal. The complementary filter pair of high-pass filter $H_P(k)$ and low-pass filter $L_P(k)$ of order 40 has a cut-off frequency of 2 kHz. The adaptive filter is updated by RLS algorithm as in (71) and by NLMS algorithm as in (82). For RLS algorithm, the forgetting factor is set to 0.99 and for NLMS algorithm, the normalized step size and off-set parameter are set to 0.02 and 0.0001, respectively. We evaluate these algorithms for a 20th order AR stochastic process, which

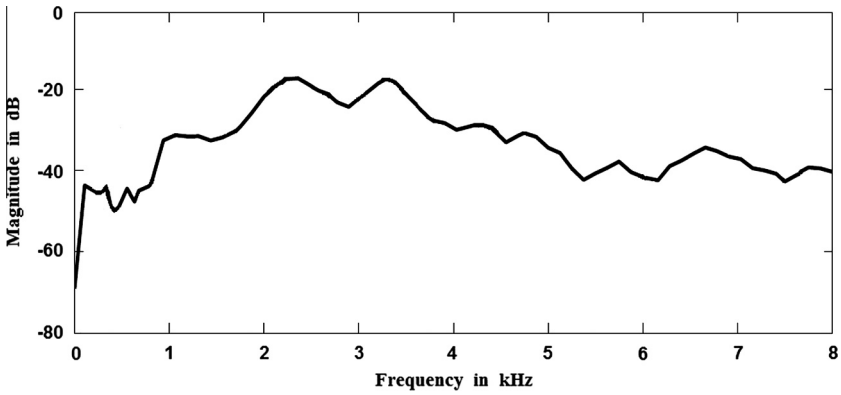

Fig. 4. Magnitude response of the original feedback path.

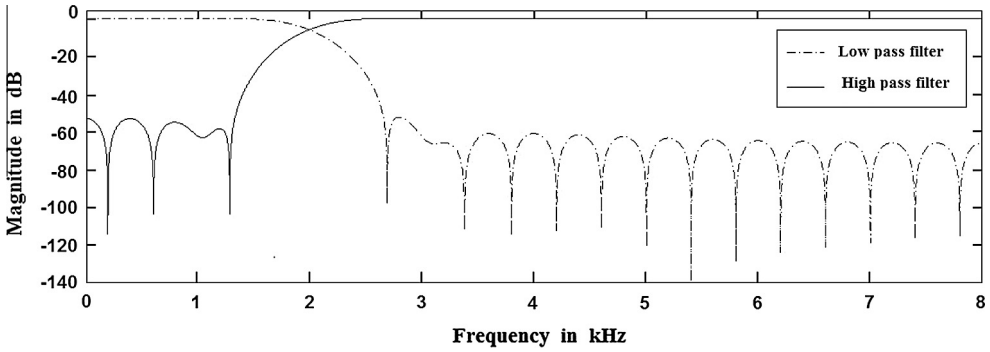

Fig. 5. Frequency response of high-pass filter $H_P(k)$ and low-pass filter $L_P(k)$.

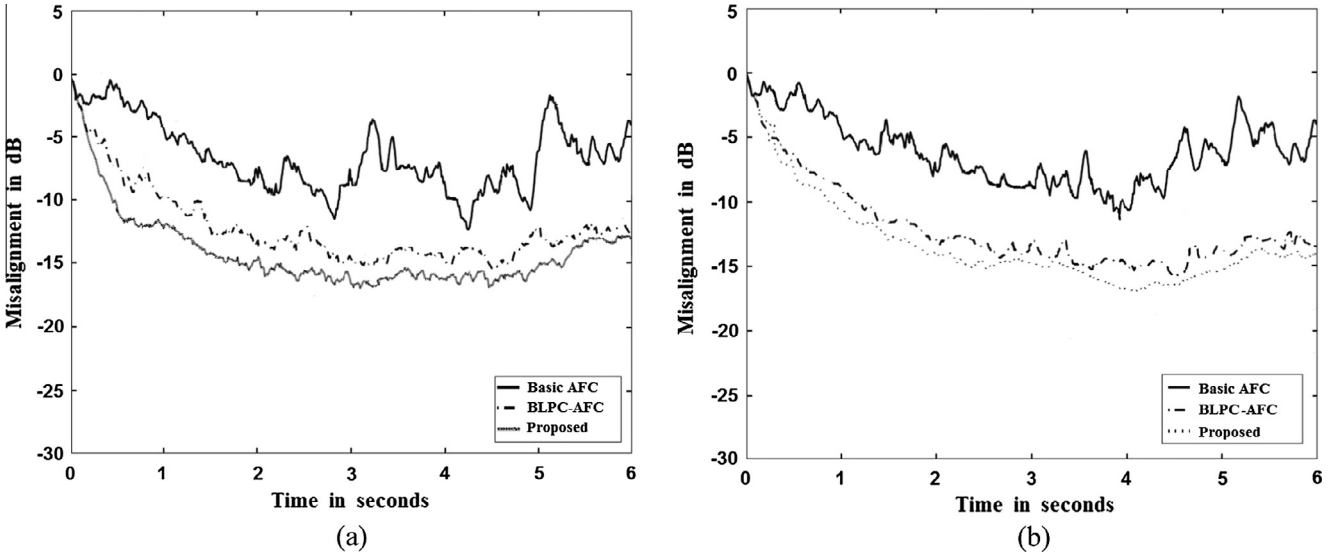

Fig. 6. Misalignment when the incoming sound signal is (a) AR stochastic signal and (b) speech signal.

is generated from an all-pole filter, and a female spoken speech segment of 6 s as the input signal. We have done our simulation for an unshaped probe noise signal which is uncorrelated with a white noise of unit variance, i.e., $w(n)$.

The magnitude response of the original feedback path, as shown in Fig. 4, was obtained from a behind-the-ear hearing aid. It can be seen from the figure that the feedback is present throughout the frequency range but the magnitude of the feedback path is comparatively higher between 2 and 7 kHz. Thus, we can say that the feedback oscillations are more likely to occur at higher frequencies than at low frequencies.

The frequency responses of the complementary high-pass and low-pass filter pair are shown in Fig. 5. Just as in [18], the comparisons are made in terms of misalignment and added stable gain (ASG) that are defined in the frequency domain as

$$Misalignment = 10\log_{10}\left(\frac{\int_0^{\pi}\left|F(e^{j\Omega})-A(e^{j\Omega})\right|^2 d\Omega}{\int_0^{\pi}\left|F(e^{j\Omega})\right|^2}\right) \quad (92)$$

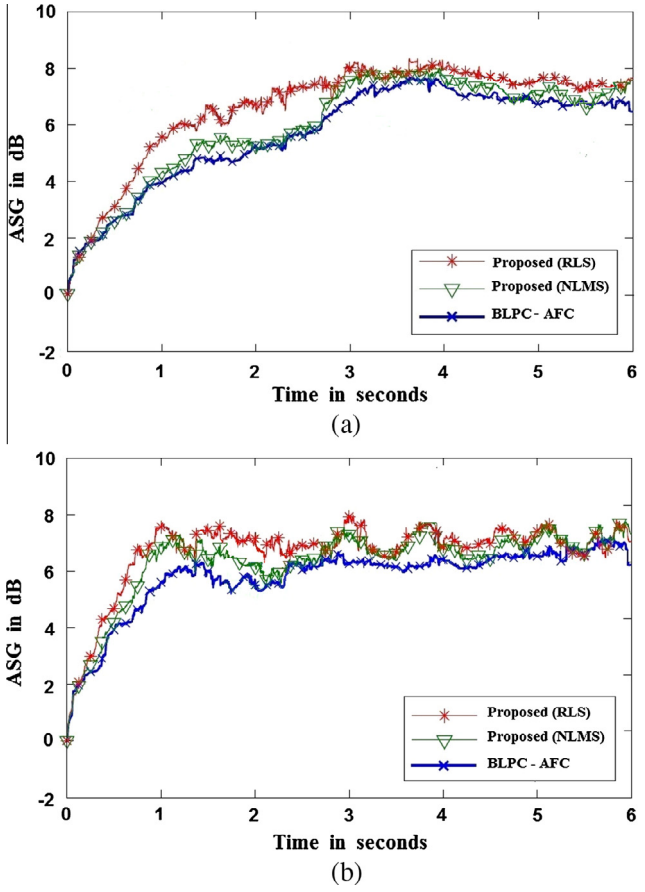

Fig. 7. Added stable gain plot for the incoming sound input as (a) AR stochastic signal and (b) speech signal.

and

$$ASG = 20\log_{10}\left(\min_{\Omega}\frac{|F(e^{j\Omega})|}{|F(e^{j\Omega}) - A(e^{j\Omega})|}\right). \quad (93)$$

Fig. 6 shows the comparison of various AFC techniques in terms of the convergence behaviour. It can be observed from Fig. 6(a) and (b) that the basic AFC system exhibits the largest misalignment as it suffers from a bias problem, but the use of BLPC vocoder decreases the bias as compared to basic AFC. The performance of BLPC vocoder-based AFC design is improved by using an uncorrelated probe noise signal in the feedback path. The proposed algorithm exhibits a better misalignment reduction over time as compared to the existing algorithms for both autoregressive process and speech segment as input. It can be seen in Fig. 6(b) that for the speech input, the proposed algorithm exhibits less fluctuations compared to that of the BLPC vocoder-based feedback canceller without probe noise.

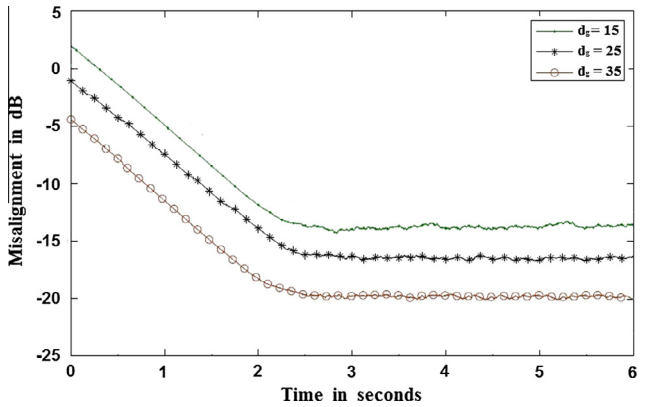

Fig. 8. Misalignment between the original and estimated feedback path with varying delay d_g.

The difference in misalignment between the best and the least performing algorithm for the AR process as input signal in Fig 6(a), is smaller as compared to the difference for speech input in Fig. 6(b). This is due to the fact that the speech signal is not correlated with itself, generally. Hence, the bias problem tends to be smaller in case of speech signal.

The proposed feedback canceller with the application of RLS and NLMS algorithms is examined for added stable gain and its performance is compared with the existing BLPC vocoder-based AFC design as shown in Fig. 7(a) for the AR process as input and in Fig. 7(b) for the speech segment as input. In Fig. 7(a), it can be seen that the proposed algorithm, both in NLMS and RLS, outperforms the existing BLPC vocoder-based AFC system. Infact, it can be noted that the proposed feedback canceller with RLS algorithm performs better than its NLMS counterpart, but from 3 to 4 s their performance is similar. In Fig. 7(b), it can be seen that from 0 to 5.2 s, the proposed feedback canceller presents a better ASG performance over that of the existing BLPC vocoder-based feedback canceller, but from 5.2 to 6 s the performance of the proposed feedback canceller fluctuates. Infact, the proposed feedback canceller with RLS algorithm performs better than with NLMS algorithm from 0 to 3 s, but their performance is similar from 3 to 6 s.

Fig. 8 depicts the misalignment between $F(k)$ and $A(k)$ for a varying forward path delay over a period of 6 s. The value of the forward path delay is set to 15, 25 and 35 samples with a constant gain of 30 dB and it can be seen that with increase in the forward path delay, the misalignment decreases and then becomes constant. Infact, as delay increases, the misalignment curve shifts downwards so that $F(k)$ can be decoupled from $G(k)L_P(k)\Delta(k)$ following (87). The misalignment is eliminated for $d_g \geqslant L_f$ and hence, is not presented in Fig. 8. The spectrogram for the incoming speech signal is depicted in Fig. 9(a) for the duration of 6 s. The spectrograms for the loudspeaker output of the proposed feedback canceller and the existing BLPC vocoder-based adaptive feedback canceller are depicted Fig. 9(b) and (c), respectively, for the same duration. Marginal degradation of the loudspeaker signal can be observed in the spectrograms of Fig. 9(b) and (c) as compared to that for the incoming speech signal in Fig. 9(a). Even though the loudspeaker outputs of both the proposed feedback canceller and the existing BLPC vocoder-based AFC are intelligible and can be understood well, the output of the proposed feedback canceller contains less audible artefacts that cause distortion thereby making the output sound clearer as compared to that of the BLPC vocoder-based AFC design. The tracking performance of the proposed feedback canceller design, for an AR stochastic signal as input, is presented in Fig. 10. We have kept the feedback path fixed during the first 15×10^3 iterations. During the subsequent 15×10^3 iterations, random walk variation is added to the feedback path in the remaining duration of simulation as per the random walk model $f(i,n) = f(i,0) + \sum_{m=1.5\times10^4}^{n} \varepsilon_f(m)$, where $f(i,n)$ is the i th tap of the original feedback path impulse response at a time instant n and $\varepsilon_f(m)$ is the mth sample of the realization of a Gaussian random sequence with mean $\mu_f = 0$ and variance $\sigma_f^2 = 0.0124$. It can be observed from the figure that the misalignment in the proposed feedback canceller design increases in the early stages of the feedback path variation but decreases to the steady-state value of misalignment.

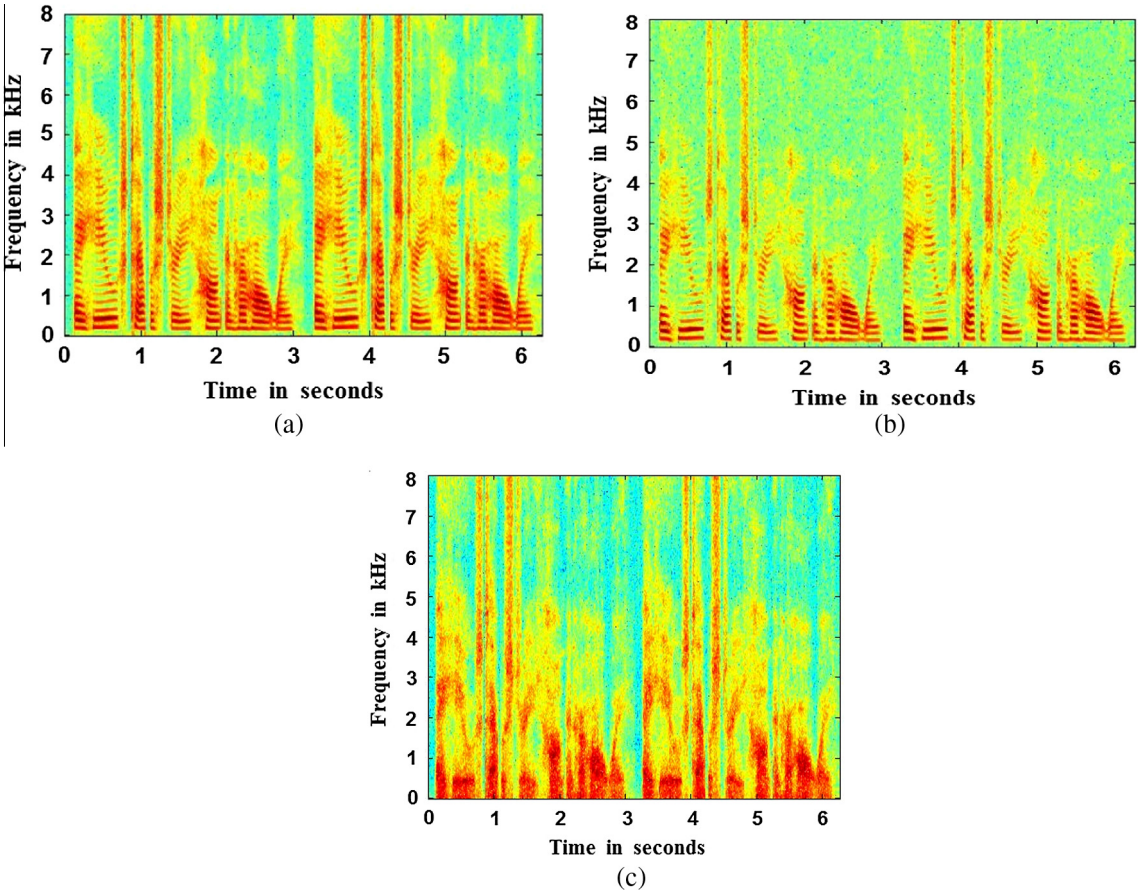

Fig. 9. Spectrograms for the (a) incoming acoustic signal, (b) loudspeaker output signal of the proposed feedback canceller, and (c) loudspeaker output signal of the BLPC vocoder based adaptive feedback canceller.

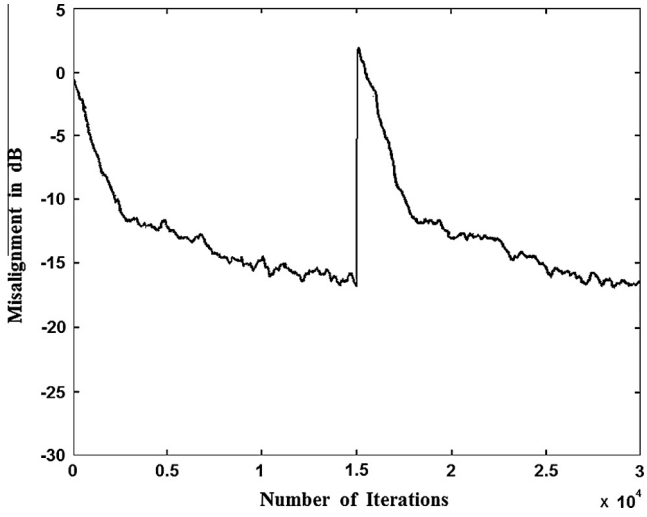

Fig. 10. Misalignment of the proposed feedback canceller when the feedback path varies after 1.5×10^4 iterations for AR stochastic signal as input.

6. Conclusion

In this work, an adaptive feedback canceller has been designed by using a probe noise signal in the estimation path of the BLPC vocoder-based AFC system to reduce the bias in the feedback estimate. We have found an optimal solution for both unshaped and shaped probe signal driven feedback cancellers and proved that the use of a probe noise to drive the feedback canceller does not always guarantee an unbiased estimate. We have described the impact of various system parameters on the feedback canceller in the proposed design. The conditions of identifiability of the feedback path for an unbiased feedback cancellation have been discussed and it has been observed that an adequate delay $d_g \geqslant L_f$ must be added in the forward path in order to reduce the bias.

In the future, we wish to analyse the BLPC vocoder-based feedback canceller with a shaped probe noise signal. We would also like to extend the analysis further by using a system generated probe noise signal in the proposed adaptive feedback canceller. Variable tap-length adaptive filter can be introduced in AFC algorithms to check the computational complexity of the system and provide better feedback cancellation performance in high noise environments. The present work also lays a foundation for further research in the application of probe noise approach, such as optimization of the probe-shaping filter and the feed-forward path of the hearing aid, to further minimize the effect of the feedback path on the loudspeaker signal.

Acknowledgment

This work is partially funded by the European Union's Seventh Framework Programme (FP7/2007-2013) under Grant agreement no. ITN-GA-2012-316969. The authors would like to thank Prof. S. H. Jensen and Prof. Jan Ostergaard of Aalborg University, Denmark for their valuable suggestions in this work. The authors would also like to thank the anonymous reviewers for their

constructive comments that have allowed us to improve the proposed approach and the quality of the work.

References

[1] Lybarger SF. Acoustic feedback control. In: Studebaker, Bess, editors. The Vanderbilt hearing-aid report. Upper Darby, PA: Monographs in Contemporary Audiology; 1982. p. 87–90.
[2] Kates JM. Adaptive feedback cancellation in hearing-aids. In: Huang Y, Benesty J, editors. Adaptive signal processing: applications to the real-world problems. Springer-Verlag; 2003. p. 23–55. http://dx.doi.org/10.1007/978-3-662-11028-7_2 (Chapter 2).
[3] Rafaely B, Roccasalva-Firenze M. Control of feedback in hearing-aids- a robust filter design approach. IEEE Trans Speech Audio Process 2000;8(6):754–6. http://dx.doi.org/10.1109/89.876319.
[4] Hellgren J, Lunner T, Arlinger S. System identification of feedback in hearing-aids. J Acoust Soc Am 1999;105(6):3481–96. http://dx.doi.org/10.1121/1.424674.
[5] Spriet A, Doclo S, Moonen M, Wouters J. Feedback control in hearing-aids. Springer Handbook Speech Process 2007:979–99. http://dx.doi.org/10.1007/978-3-540-49127-9_48.
[6] Hellgren J, Lunner T, Arlinger S. Variations in feedback of hearing-aids. J Acoust Soc Am 1999;106(5):2821–33. http://dx.doi.org/10.1121/1.428107.
[7] Spriet A. Adaptive filtering techniques for noise reduction and acoustic feedback cancellation in hearing-aids Ph.D. dissertation. Katholieke Universiteit; 2004.
[8] Siqueira MG, Alwan A. Steady-state analysis of continuous adaptation in acoustic feedback reduction systems for hearing-aids. IEEE Trans Speech Audio Process 2000;8(6):443–53. http://dx.doi.org/10.1109/89.848225.
[9] Spriet A, Rombouts G, Moonen M, Wouters J. Adaptive feedback cancellation in hearing-aids. J Franklin Inst 2006;343(6):545–73. http://dx.doi.org/10.1016/j.jfranklin.2006.08.002.
[10] Ma G, Gran F, Jacobsen F, Agerkvist F. Adaptive feedback cancellation with band-limited LPC vocoder in digital hearing-aids. IEEE Trans Audio Speech Lang Process 2011;19(4):677–87. http://dx.doi.org/10.1109/TASL.2010.2057245.
[11] Hellgren J. Compensation of hearing loss and cancellation of acoustic feedback in digital hearing-aids Ph.D. dissertation. Linkopings Universitet; 2000.
[12] Guo M. Analysis, design and evaluation of acoustic feedback cancellation system for hearing-aids – a novel approach to unbiased feedback estimation Ph.D. dissertation. Aalborg University; 2012.
[13] Guo M, Jensen SH, Jensen J, Grant SL. On the use of a phase modulation method for decorrelation in acoustic feedback cancellation. In: Proceedings of 20th European signal processing conference. p. 2000–4.
[14] Schroeder MR. Improvement of acoustic-feedback stability by frequency shifting. J Acoust Soc Am 1964;36(9):1718–24. http://dx.doi.org/10.1121/1.1919270.
[15] Park YC, Kim IY, Lee SM. An efficient adaptive feedback cancellation for hearing-aids. In: Proceedings of 25th annual international conference of the IEEE engineering in medicine and biology society. p. 1647–50. http://dx.doi.org/10.1109/IEMBS.2003.1279693.
[16] Berdahl E, Harris D. Frequency shifting for acoustic howling suppression. In: Proceedings of 13th international conference on digital audio effects. p. 174–7.
[17] Rabiner LR, Schafer RW. Digital signal processing of speech signals. Prentice-Hall, NJ: Englewood cliffs; 1978.
[18] Spriet A, Proudler I, Moonen M, Woulters J. Adaptive feedback cancellation in hearing-aids with linear prediction of the desired signal. IEEE Trans Signal Process 2005;53(10):3749–63. http://dx.doi.org/10.1109/TSP.2005.855108.
[19] Waterschoot TV, Moonen M. Fifty years of acoustic feedback control: State of the art and future challenges. Proc IEEE 2011;99(2):288–327. http://dx.doi.org/10.1109/JPROC.2010.2090998.
[20] Forsell U, Ljung L. Closed-loop identification revisited. Automatica 1999;35(7):1215–41. http://dx.doi.org/10.1016/S0005-1098(99)00022-9.
[21] Shusina NA, Rafaely B. Unbiased adaptive feedback cancellation in hearing-aids by closed-loop identification. IEEE Trans Audio Speech Lang Process 2006;14(2):658–65. http://dx.doi.org/10.1109/TSA.2005.852986.
[22] Guo M, Elmedyb TB, Jensen SH, Jensen J. On acoustic feedback cancellation using probe noise in multiple-microphone and single-loudspeaker systems. IEEE Signal Process Lett 2012;19(5):283–6. http://dx.doi.org/10.1109/LSP.2012.2190507.
[23] Forsell U, Ljung L. Bias of feedback cancellation algorithms in hearing-aids based on direct closed-loop identification. IEEE Trans Speech Audio Process 2001;9(8):906–13. http://dx.doi.org/10.1109/89.966094.
[24] Painter T, Spanias A. Perceptual coding of digital audio. Proc IEEE 2000;88(4):451–513. http://dx.doi.org/10.1109/5.842996.
[25] Anand A, Bhatia R. Performance evaluation of band-limited LPC vocoder and band-limited RELP vocoder in adaptive feedback cancellation. In: Proceedings of IEEE international conference on advances in computing, communications and informatics. p. 126–32. http://dx.doi.org/10.1109/ICACCI.2015.7275596.
[26] Nakagawa CRC, Nordholm S, Yan W-Y. New insights into optimal acoustic feedback cancellation. IEEE Signal Process Lett 2013;20(9):869–72. http://dx.doi.org/10.1109/LSP.2013.2271318.
[27] Haykin S. Adaptive filter theory. 4th ed. NJ Prentice-Hall: Upper Saddle River; 2002.